650V D-Mode 30A GaN-on-Si

Description

- 650 V D mode power transistor
- $R_{DS(on)}$ = 135 mΩ
- Fast and controllable fall and rise times
- Reverse current capability
- Dual gate pads for optimal layout
- Zero reverse recovery loss

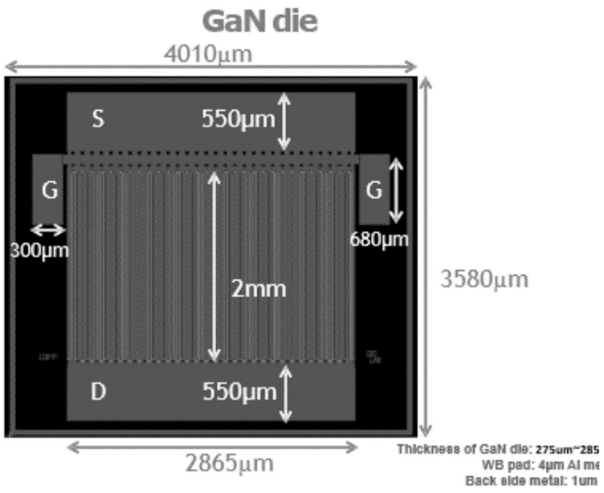

Applications

- Power Adapters / Converter
- Appliance Motor Drives
- Wireless Power Transfer

Key Parameters

Parameter	Value	Unit
V_{DS}	650	V
I_D (Note 1)	30	A
Die Size	4,010 x3,580	mm

Electrical Characteristic ($T_{SUBSTRATE}$ = 25 °C except as noted)

Parameter	Symbol	Test Conditions	Value			Unit
			Min.	Typ.	Max.	
Drain-Source Breakdown Voltage	BV_{Dss}	V_G=-15V, I_D=1.2mA,	800	1200	-	V
Gate Threshold Voltage	$V_{GS(th)}$	V_D=10V, I_D=100mA	-11	-9	-7	V
Gate -Source Leakage Current	I_{GSS}	V_D=200V, V_G=-15V	-	2	50	uA
Drain-Source Leakage Current	I_{DSS}	V_D=200V, V_G=-15V	-	2	50	uA
Drain-Source on-state Resistance	R_{on}	V_D=0.5V, V_G=+1V	-	135	-	mohm
Drain Current @T=25℃	I_D	V_D=10V, V_G=+1V	-	45	-	A
Input capacitance	Ciss	VD=200V, VG=-15V, 1MHz		165		pF
Output capacitance	Coss	VD=200V, VG=-15V, 1MHz		60		pF
Reverse transfer capacitance	Crss	VD=200V, VG=-15V, 1MHz		28		pF

1) Performance will vary based on assembly technique and substrate of choice

HTRB Test (1,000 hr)

hrs	sample	Vtc1(V)	Ig1(A)	Ron_swp(Ohm)	Ron_spot(Ohm)	Igss0(A)	Vsd(V)	Idss0(A)	Function
T0	1.0000E+00	-8.5592E+00	6.3079E-10	1.6369E-01	1.6484E-01	-9.2322E-09	3.0008E+00	1.0662E-07	PASS
T0	2.0000E+00	-8.8285E+00	1.1731E-09	1.5097E-01	1.5172E-01	-1.5620E-08	3.0008E+00	1.6683E-07	PASS
T168	1.0000E+00	-9.9926E+00	2.9685E-10	1.3953E-01	1.4082E-01	-2.5925E-07	3.0004E+00	5.5565E-07	PASS
T168	2.0000E+00	-1.0096E+01	-1.1556E-11	1.3869E-01	1.3949E-01	-3.4400E-07	3.0004E+00	5.7609E-07	PASS
T500	1.0000E+00	-9.8796E+00	1.0868E-09	1.3768E-01	1.3891E-01	-7.4781E-07	3.0005E+00	1.6739E-06	PASS
T500	2.0000E+00	-9.9909E+00	1.2945E-09	1.3481E-01	1.3555E-01	-6.0248E-07	3.0004E+00	1.8405E-06	PASS
T1k	1.0000E+00	-9.4791E+00	1.9405E-10	1.5798E-01	1.5798E-01	-8.0966E-07	3.0009E+00	2.2283E-06	PASS
T1k	2.0000E+00	-9.9883E+00	2.8444E-10	1.3797E-01	1.3897E-01	-1.9202E-06	3.0008E+00	2.7615E-06	PASS

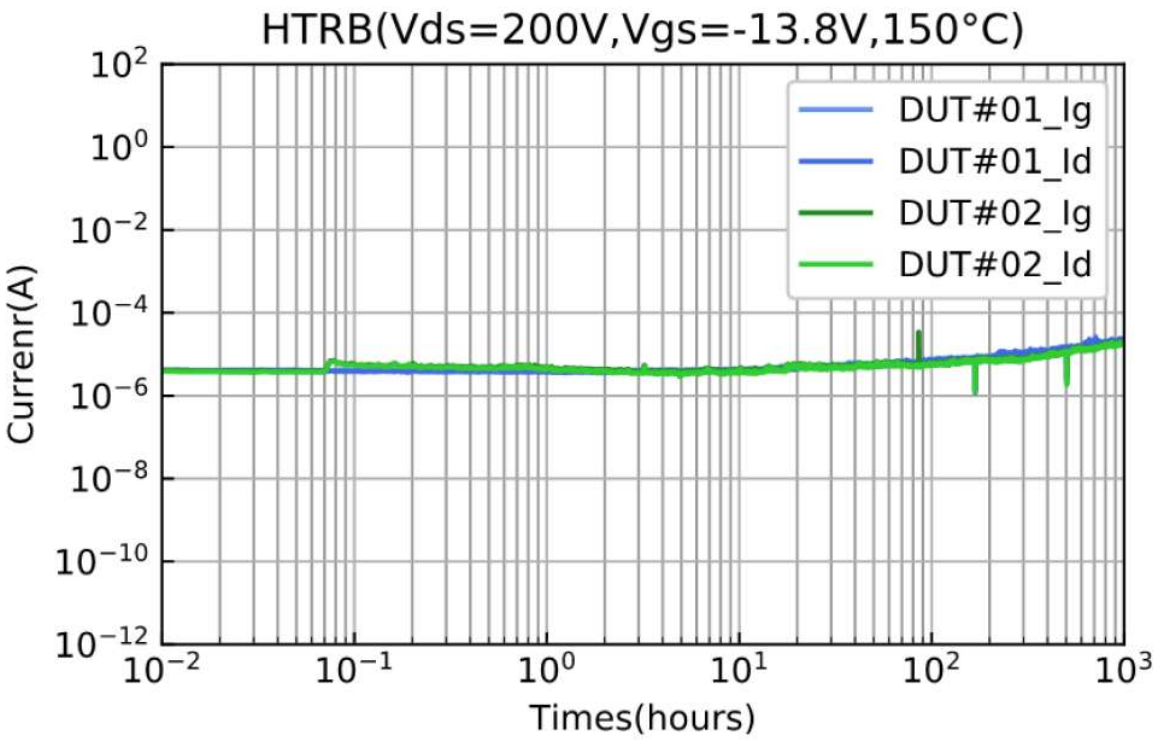

The device was stressed at VDS = 200VDC and T=150℃

Package Information : TO-220

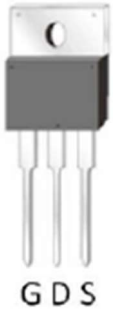

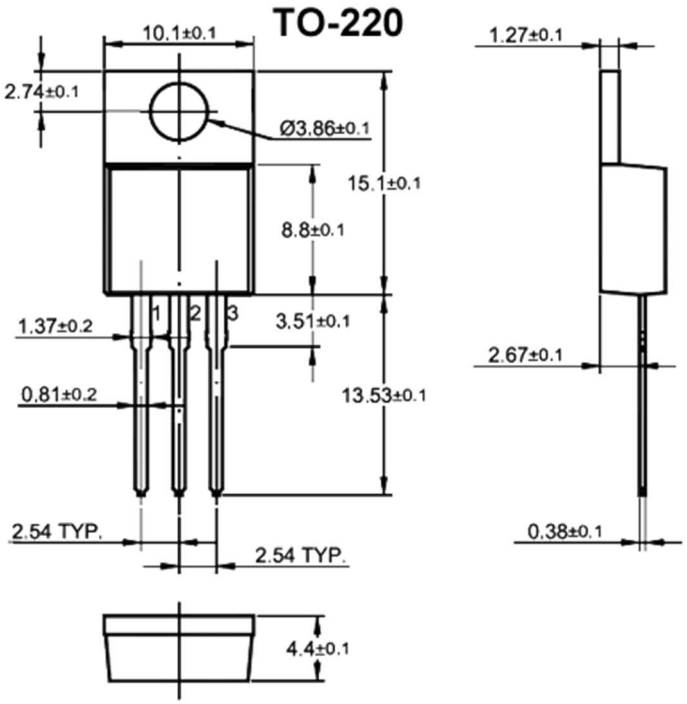

TO-220 Tube DImension